Poindus

VariPPC

VESA/Pole Compliant Mounting System

250 / 250i

270 / 270i

Features

VESA/Pole Mountable Aesthetic Panel PC Meet Your Business Requirements

VariPPC 250 durability and flexibility meets demand with VESA Wall/Pole mount options freeing space for hospitality & retail applications. Aesthetic appearance & slim panel can be configured as a Strategic Touch Point providing real time information to staff & customers.

Redefining Service

The PPC connects to the VariIO I/O Box by a single custom high speed USB Type C connector linking all devices simplifying cable management. The PPC can be removed leaving the VariIO I/O Box and peripherals in place by disconnecting a single cable providing quick service for maintenance significantly reducing engineer onsite visit time.

Ordering Information

VariPPC 250i/270i (with VariIO I/O Box)

VariPPC 250i/270i i5-7300U/6300U	Intel® Kabylake/Skylake Core™ i5-7300U/6300U CPU
VariPPC 250i/270i i3-6100U	Intel® Skylake Core™ i3-6100U 2.3 GHz CPU
VariPPC 250i/270i Celeron 3955U	Intel® Skylake Celeron® 3955U 2.0 GHz CPU
VariIO	with 2xDC+12V, 1xDC+24V Powered USB Ports, 180w Adapter
VariIO	without Powered USB port

Multi-touch Screen

Waterproof - IP66 on Front Panel

Extendable VariIO I/O Box Custom Type C connector

Detail features

- Intel 6th Generation Celeron i3, i5 high-end processors in a fanless structure.
- True flat 15” 4:3 LCD, 400 nits / 17’’ 5:4 LCD, 400 nits (LED backlight) with IP66 protection.
- Standard VESA 75*75 Bracket, Wall/Pole-mount supported
- Efficient onboard panel IO interface (LAN + 2 USB)
- Extendable IO capability to meet any project specification (Optional)
  - Rich VariIO I/O Box with customization options & independently mountable features
  - Compatible with simple I/O devices
  - Quick SWAP Design for easy maintenance.
- Peripheral compatibility across the whole VariPOS 2 Series: 2D Scanner, RFID, MSR, iButton & Fingerprint

Specification

Model Name		• VariPPC 250i / 270i (with VariIO I/O Box)	• VariPPC 250 / 270
Main Board	Processor	Intel® Core™ i5-7300U/6300U Processor Intel® Core™ i3-6100U Processor Intel® Celeron® Processor 3955U	
	Chipset	CPU Integrated	
	System Memory	1 x SO-DIMM DDR4 slot, 4GB RAM as standard. Max. memory support up to 16GB. Easy acess with secured cover for easy maintainence.	
	TPM	Intel F/W	
	Intel AMT	Only i5 CPU	
Display & Touch	LCD Size	15" 4:3 / 17" 5:4 TFT LCD (LED backlight)	
	Brightness	15" / 17" - 400 nits	
	Resolution	15" - 1024 x 768 (4:3) / 17" - 1280 x 1024	
	Touch	True Flat Projected Capacitive Technology	
Storage	HDD/SSD	1 x SATA III (2.5'')	
Panel I/O	LAN Port	1 x Gigabit Ethernet by RJ-45	
	USB Port	2 x USB 3.0	
	Speaker	HD Audio, 2W Speaker x 2	
	Power Switch	1 x power on/off button	
VariIO I/O Box & Expansion (Optional)	Cash Drawer	1 x RJ-11 (Support DC +12V or +24V (default)) port supports 2 cash drawers	N/A
	LAN port	1 x Gigabit Ethernet by RJ-45	N/A
	USB port	2 x USB 3.0; 4 x USB 2.0	N/A
	Powered USB Port	2 x DC+12v Powered USB 1 x DC+24v Powered USB	N/A
	COM port	4 x RS-232 (jumper setting, support DC+0/5/12v, default setting is 0v)	N/A
OS Support		Windows 10 2016 IOT (64bit), Windows 8.1 (64bit), Windows 7 (32bit / 64bit) (Intel® Kabylake Core™ i5-7300U supports Win 10 64bit)	
Power Adapter (External adapter)		DC Model : Voltage:+19VDC, Std. 180watt (*VariIO PUSB) DC Model : Voltage:+19VDC, Std. 90watt (*VariPPC 250i/270i ; VariIO Non PUSB)	Voltage:+19VDC, Std. 90watt
Compliance	Certifications	CE, FCC, LVD, RoHS	
	Protection	IP 66 on front panel	
Material		Main Unit: Die-Cast Aluminum	
Color		Space Gray / Black (PPC)	
Dimension (W x H x D mm)		365.89 x 281.89 x 43.23 (15") / 396.93 x 329.47 x 42.75 (17") mm	
Environmental Condition	Operating	0°C ~ 40°C, 10% ~ 90% RH, non-condensing	
	Storage	-20°C ~ 60°C, 10% ~ 90% RH, non-condensing	

Model Name		• VariPPC 250i / 270i (with VariIO I/O Box)	• VariPPC 250 / 270
Optional Accessories	2nd Display	10.1" Resolution 1280 x 800 (16:10 wide screen) USB Type, with or without True-flat P-cap 10 point Multi-touch	N/A
	2nd VESA Bracket	Supports Display M series (USB Type)	N/A
	LCM	2x20 USB Type	N/A
	MSR	ISO 3-Tracks Slim MSR USB Type	
	ibutton	Dallas USB Type	
	RFID	13.56Mhz USB Type	
	Fingerprint	DigitalPersona, USB Type	
	Scanner	2D scanner, USB Type	
Carton		L 460 x W 300 x H 510 mm (15") / L 495 x W 315 x H 550 mm (17")	

* The right has been reserved to change the specification without prior notice

Dimensions

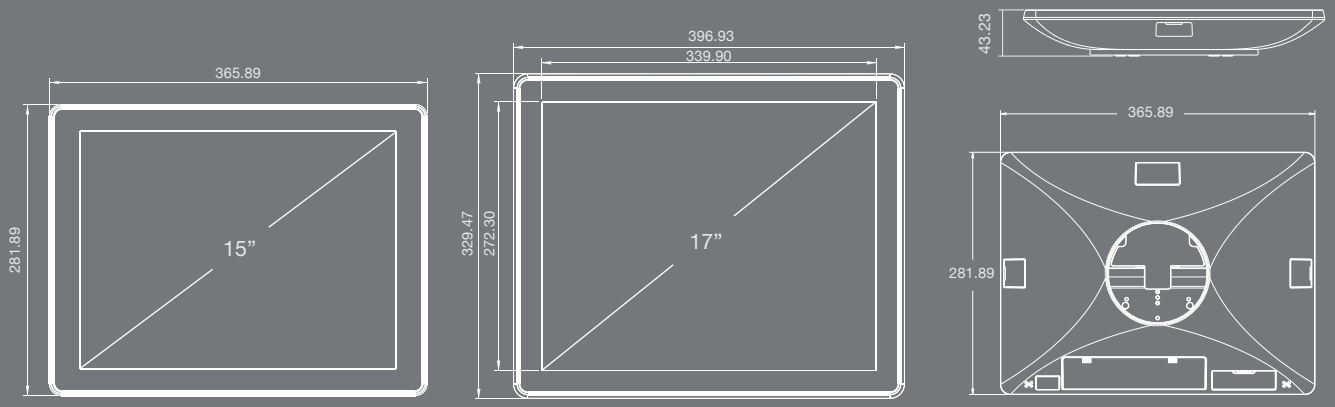

VariIO I/O Box (PE18)

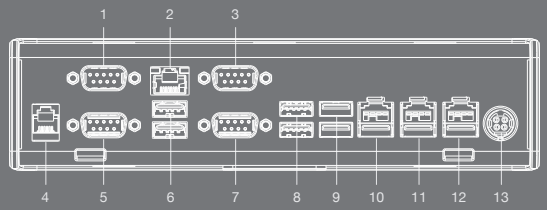

1 COM 5	5 COM 4	9 USB	13 DC 19V
2 LAN	6 USB	10 PUSB 12V	
3 COM 7	7 COM 6	11 PUSB 12V	
4 Cash Drawer	8 USB	12 PUSB 24V	

Panel PC IO Interface (PE17)

1 USB 3.0 TYPE C	5 LAN
2 DC19V	6 2.5" HDD
3 USB 3.0	7 POWER
4 USB 3.0	

Poindus
www.poindus.com

Poindus Systems Corp. Headquarters
5F, No.59, Ln. 77, Xing-Ai Rd., Neihu Dist., Taipei City 114, Taiwan. R.O.C
+ 886 27721 4688 + 886 27721 2289 sales@poindus.com

Germany
ADASYS GmbH Elektronische Komponenten
Max-Planck-Str. 10 70806 Kornwestheim
+ 49 7154 83000
+ 49 7154 8300 599
info@adasys.de

UK
3 Devonshire Business Park, Basingstoke,
Hampshire, RG21 6XN, UK
+ 44 330 555 0081
+ 44 330 555 0082
puk@poindus.com

V 2020.09